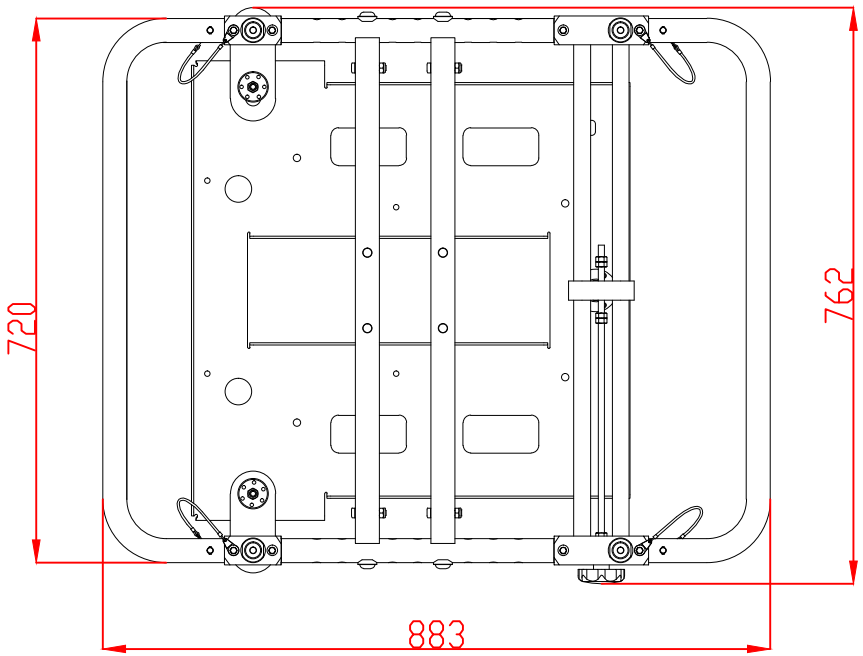

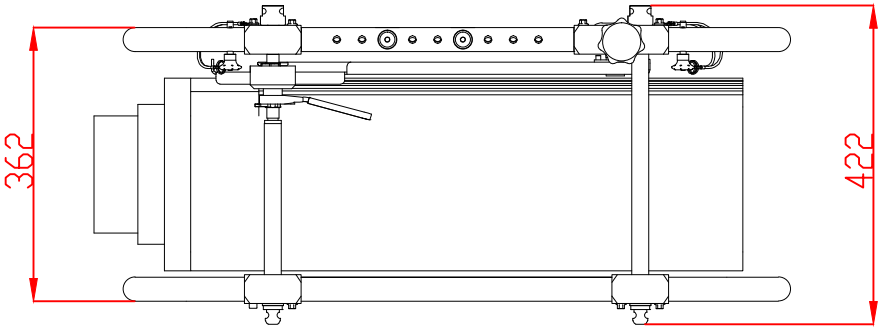

rigtec

Scale:	1:10@A4	Event:	XXXXXXXXXXXXXXXXXXXX	Client:	XXXXXXXXXXXXXXXXXXXX	Information:	This drawing and the design are the property of Rigtec and must not be used or copied by a third party without permission.
Drawn By:	ST	Dates:	XXXXXXXXXXXXXXXXXXXX	Contact:	XXXXXXXXXXXXXXXXXXXX		
Date:	----	Venue	XXXXXXXXXXXXXXXXXXXX	Reference:	XXXXXXXXXXXXXXXXXXXX		
Revision:	XX	Room:	XXXXXXXXXXXXXXXXXXXX	Rev. Date:	----		